WP97080PL

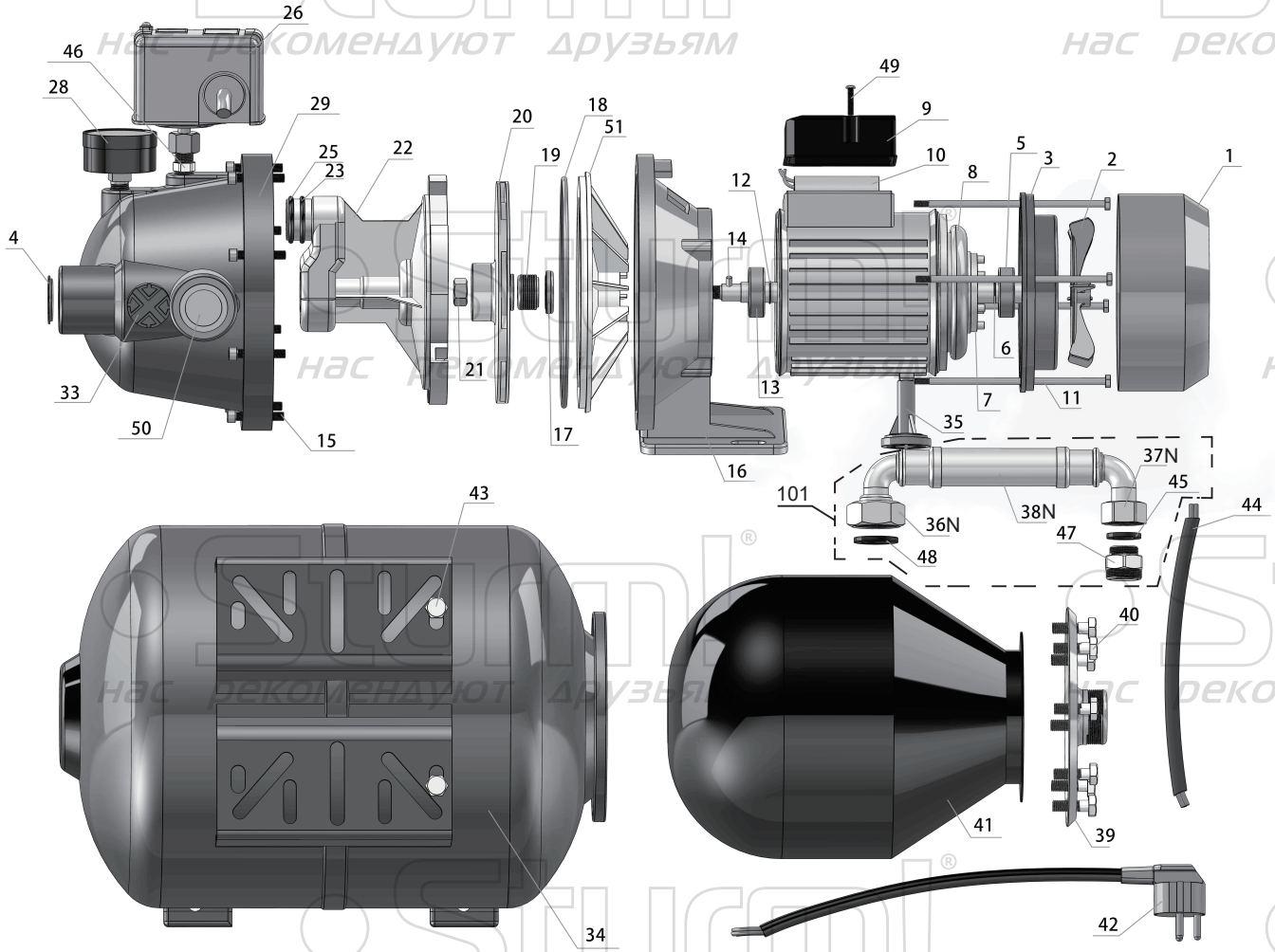

NO.	DESCRIPTION
1	FAN COVER
2	FAN
3	MOTOR END COVER
4	OUTLET PROTECTOR PLASTIC COVER
5	BACK BEARING
6	CIRCLIP
7	SHAFT AND ROTOR ASSEMBLY
8	STATOR WITH COIL ASSEMBLY
9	TERMINAL BOX
10	CAPACITOR
11	MOTOR TIE-ROD
12	CIRCLIP
13	FRONT BEARING
14	IMPELLER PIN
15	FIXING BOLT FOR PUMP BODY
16	MOTOR FRONT COVER
17	MECHANICAL SEAL STATIONARY RING
18	O RING
19	MECHANICAL SEAL ROTARY RING
20	IMPELLER
21	IMPELLER STOP NUT
22	VENTURI ASSEMBLY
23	O RING FOR VENTURI
25	UPPER O RING FOR VENTURI
26	PRESSURE SWITCH
28	PRESSURE GAUGE
29	PUMP BODY PLASTIC
33	HEAD SCREW
34	AIR PRESSURE TANK
35	FOOT BRACKET
36N	OUTLET SOFT CONNECTION
37N	AIR PRESSURE TANK CONNECTION
38N	CONNECTION TUBE BETWEEN AIR PRESSURE TANK AND PUMP
39	MEMBRANE FASTENING
40	AIR TANK FASTENING BOLT
41	MEMBRANE
42	POWER CABLE & PLUG
43	PRESSURE TANK SCREW
44	MOTOR LEAD WIRE
45	CONNETION RUBBER O RING
46	PRESSURE SWITCH DOUBLE WIRE CONNECTION
47	DOUBLE WIRE CONNECTION
48	O RING CONNECTION
49	TERMINAL BOX SCREW
50	INLET PROTECTOR PLASTIC COVER
51	CONNECTION BAFFLE
101	TUBE ASSEMBLY